Degree of protection: IP65

Hoods, side entry

Thread	Designation	Order No.
M20	H10B-SE-2L/SC-M20	111 010 541 1002
M25	H10B-SE-2L/SC-M25	111 010 514 1003
PG16	H10B-SE-2L/SC-PG16	111 010 541 1010

Please refer to page 15-02 for choosing proper model of lock.

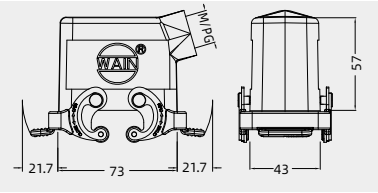

Hoods, side entry, high construction

Thread	Designation	Order No.
M25	W10B-SEH-2L/SC-M25	111 110 541 5001
M32	W10B-SEH-2L/SC-M32	111 110 541 5002
PG21	W10B-SEH-2L/SC-PG21	111 110 541 5003
PG29	W10B-SEH-2L/SC-PG29 with sleeve	111 110 541 5004
M25	W10B-SEH-2L/SC-M25 WS	111 110 541 5103
M32	W10B-SEH-2L/SC-M32 WS	111 110 541 5104
PG21	W10B-SEH-2L/SC-PG21WS	111 110 541 5111
PG29	W10B-SEH-2L/SC-PG29 WS	111 110 541 5112

Please refer to page 15-02 for choosing proper model of lock.

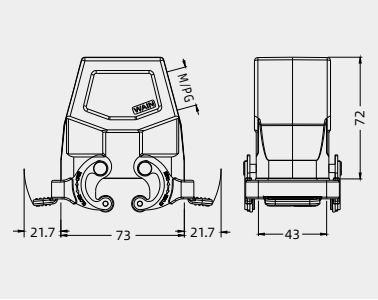

Hoods, top entry

Thread	Designation	Order No.
M20	H10B-TE-2L/SC-M20	111 010 441 1002
M25	H10B-TE-2L/SC-M25	111 010 414 1003
PG16	H10B-TE-2L/SC-PG16	111 010 441 1010

Please refer to page 15-02 for choosing proper model of lock.

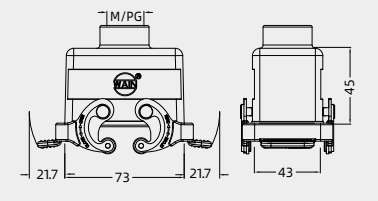

Hoods, top entry, high construction

Thread	Designation	Order No.
M25	W10B-TEH-2L/SC-M25	111 110 441 5001
M32	W10B-TEH-2L/SC-M32	111 110 441 5002
PG21	W10B-TEH-2L/SC-PG21	111 110 441 5003
PG29	W10B-TEH-2L/SC-PG29 with sleeve	111 110 441 5004
M25	W10B-TEH-2L/SC-M25 WS	111 110 441 5103
M32	W10B-TEH-2L/SC-M32 WS	111 110 441 5104
PG21	W10B-TEH-2L/SC-PG21 WS	111 110 441 5111
PG29	W10B-TEH-2L/SC-PG29 WS	111 110 441 5112

Please refer to page 15-02 for choosing proper model of lock.

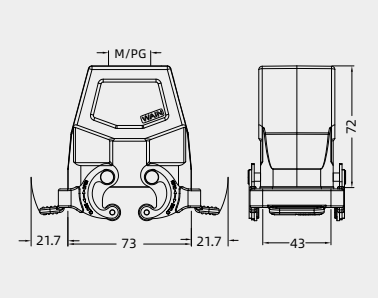

Bulkhead mounted housings
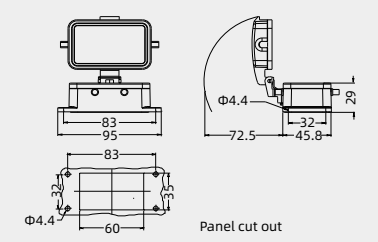
Thread	Designation	Order No.
---	H10B-BK-4B	111 010 330 1001
	with plastic cover	
---	H10B-BK-4B-CV	111 010 370 1001
	with metal cover	
---	H10B-BK-4B-MCV	111 010 370 1101